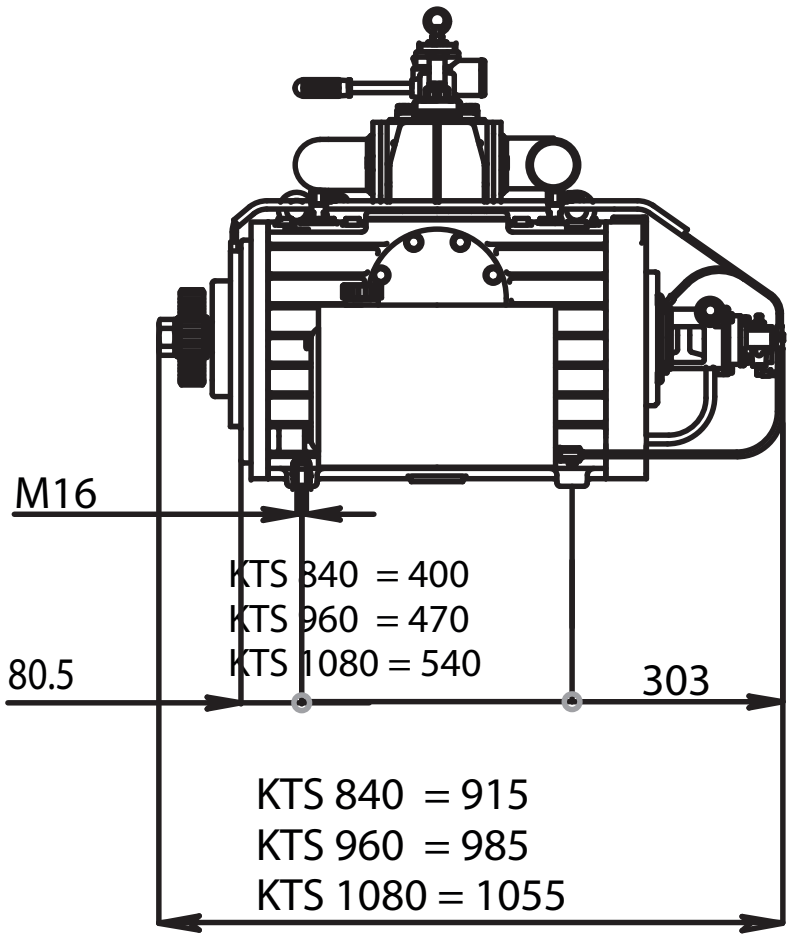
M16
KTS 840 = 400
KTS 960 = 470
KTS 1080 = 540
80.5
303
KTS 840 = 915
KTS 960 = 985
KTS 1080 = 1055

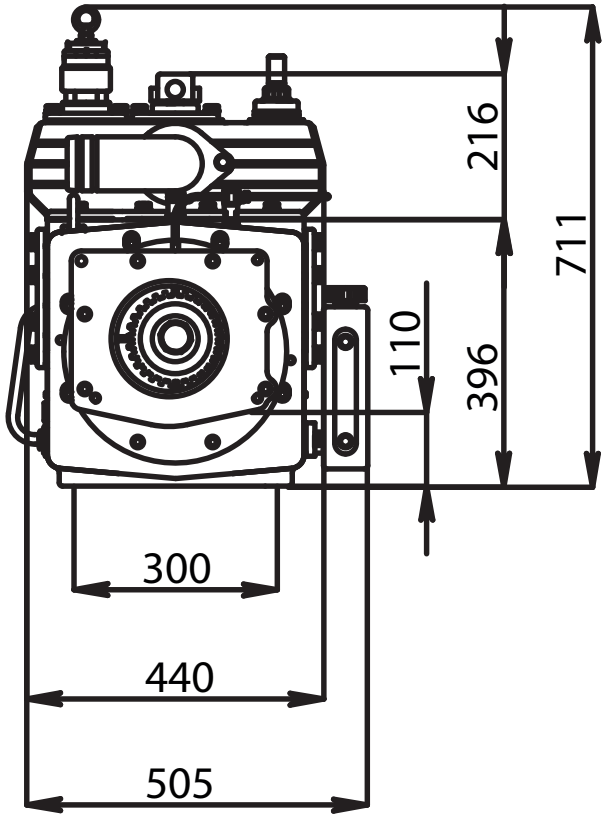
216
711
110
396
300
440
505

KTS